LTF TECHNOLOGY

POWERED BY LTF

TA96WA12LEDS-0002

No-Load Electronic Transformer

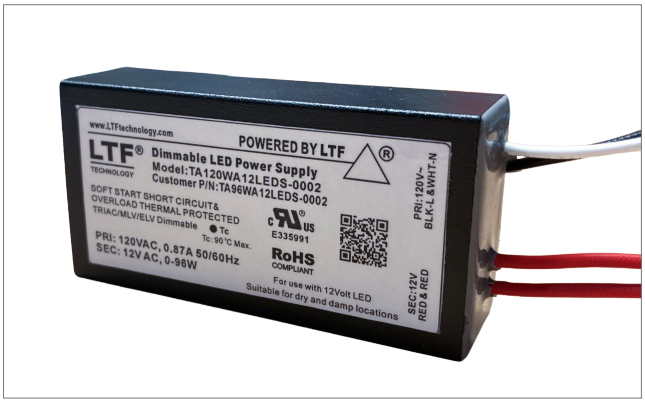

Efficiency	> 85%
Power Factor	> 98%
Case TC	90C° Max.
Protection	Input / Output
Storage	-30°C / +90°C
Humidity	95% RH Max.
IP Rating	IP 65
Dimming	TRIAC, ELV, MLV

c UL us
E364143

RoHS

FC
Part 15 Class B Compliant

3-5* YEAR WARRANTY
*Ask for more Information

FEATURES

- No load technology, works with both halogen & LED AC loads.**
- Isolated output power per NEC and UL safety requirements.
- UL recognized / listed power supply, meets UL2108 requirements.
- FCC Part 15 Class B compliant.
- Soft start, auto-reset, short circuit, overload and thermal protection.
- Dimmable with ELV, TRIAC, and MLV type dimmers.
- Optional 0-10V dimming.
- Low profile, small compact design to fit in most enclosures.

ELECTRICAL SPECIFICATIONS

Model Number	Wattage	Input Voltage	Output Voltage	Load Type	Form Factor	Dimming
TA96WA12LEDS-0002	96W	120V AC, 0.87A 50/60Hz	12V AC	AC LED Bulbs, Incandescent & Halogen Bulbs	MB2	TRIAC, ELV, MLV

P: +1 (847) 498-5832 F: (773) 337-5628 E: LTFsales@ltftechnology.com
11966 Oak Creek Pkwy. Unit H, Huntley, IL 60142 U.S.A. | LTFtechnology.com
© LTF, L.L.C. All Rights Reserved.

MECHANICAL SPECS

Form Factors	Dimensions
MB2	3.1 in. (78 mm) x 1.6 in. (40 mm) x 0.9 in. (22.1 mm)

MB2

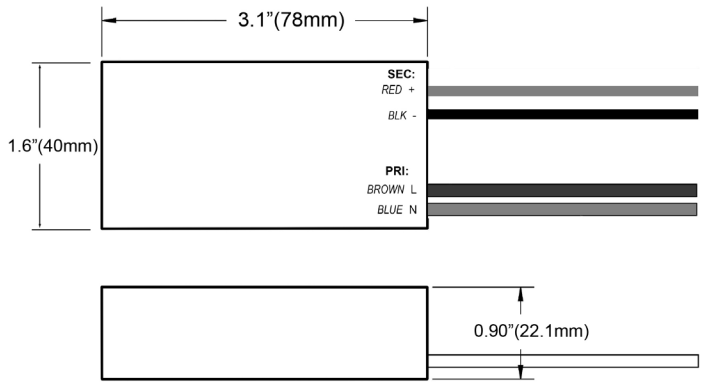

REMOTE ENCLOSURES

Form Factors	Dimensions
G2 (indoor)	9 in. (233.1 mm) x 3.4 in. (85.5 mm) x 2 in. (48.9 mm)
G3 (outdoor)	11 in. (280 mm) x 4 in. (103 mm) x 2.2 in. (56 mm)

G2

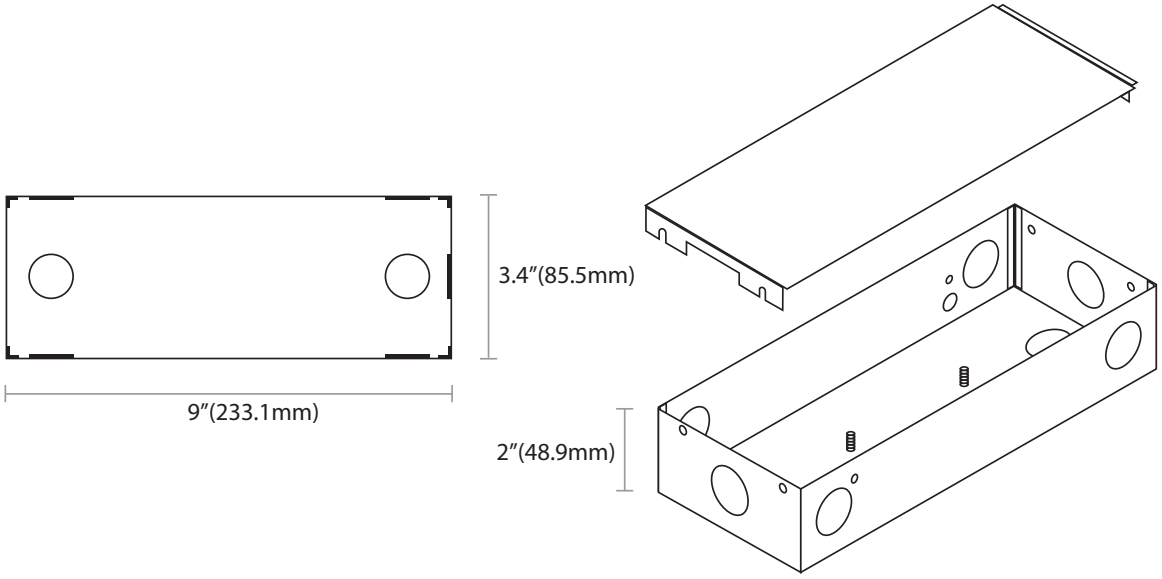

© LTF, L.L.C. All Rights Reserved.

G3

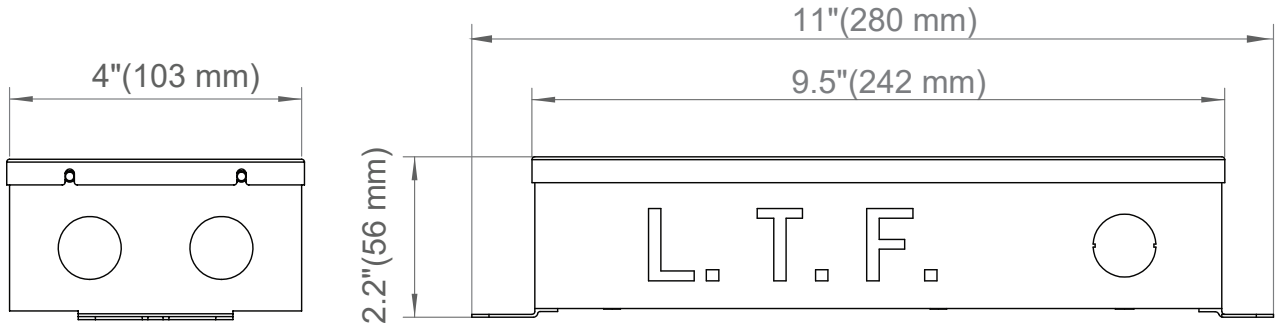

© LTF, L.L.C. All Rights Reserved.