LTF TECHNOLOGY

POWERED BY LTF

TA60WA12LED-0002

No-Load Electronic Transformer

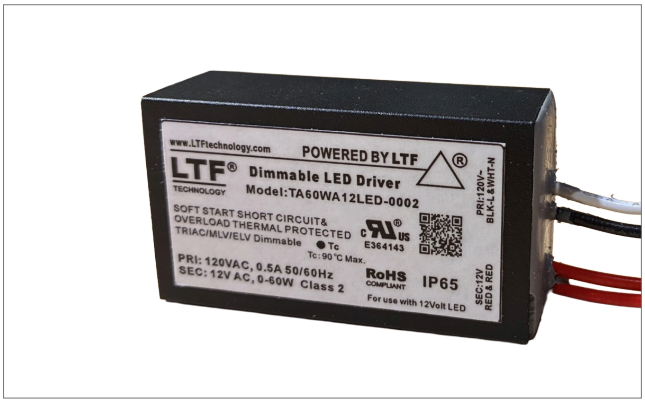

Efficiency	> 85%
Power Factor	> 98%
Case TC	90C° Max.
Protection	Input / Output
Storage	-30°C / +90°C
Humidity	95% RH Max.
IP Rating	IP 65
Dimming	TRIAC, ELV, MLV

c UL us
E364143

RoHS

FC
Part 15 Class B Compliant

3-5* YEAR WARRANTY
*Ask for more Information

FEATURES

- No load technology, works with both halogen & LED AC loads.**
- Isolated output power per NEC and UL safety requirements.
- UL recognized / listed power supply, meets UL2108 requirements.
- FCC Part 15 Class B compliant.
- Soft start, auto-reset, short circuit, overload and thermal protection.
- Dimmable with ELV, TRIAC, and MLV type dimmers.
- Optional 0-10V dimming.
- Low profile, small compact design to fit in most enclosures.

ELECTRICAL SPECIFICATIONS

Model Number	Wattage	Input Voltage	Output Voltage	Load Type	Form Factor	Dimming
TA60WA12LED-0002	60W	120V AC, 0.5A 50/60Hz	12V AC	AC LED Bulbs, Incandescent & Halogen Bulbs	B2	TRIAC, ELV, MLV

P: +1 (847) 498-5832 F: (773) 337-5628 E: LTFsales@ltftechnology.com
11966 Oak Creek Pkwy. Unit H, Huntley, IL 60142 U.S.A. | LTFtechnology.com
© LTF, L.L.C. All Rights Reserved.

MECHANICAL SPECS

Form Factors	Dimensions
B2	2.2 in. (56.5 mm) x 1.3 in. (33 mm) x 0.8 in. (21 mm)

B2

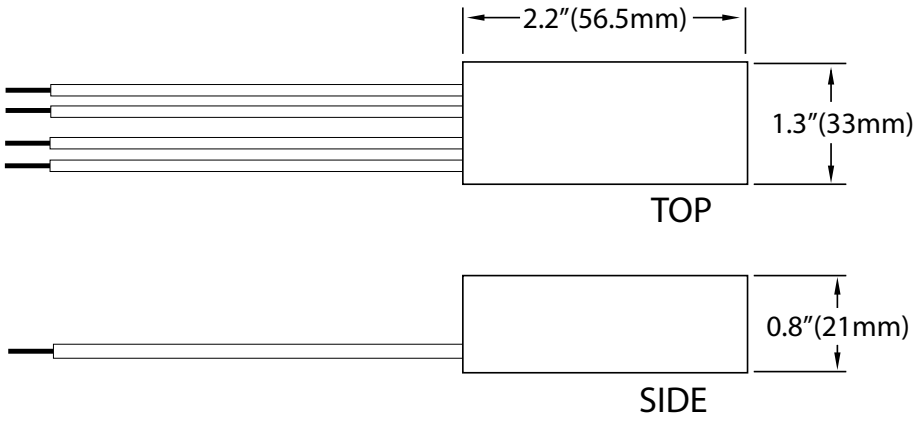

REMOTE ENCLOSURES

Form Factors	Dimensions
G1 (indoor)	7.4 in. (189 mm) x 2 in. (51 mm) x 1.7 in. (43 mm)
G4 (outdoor)	9.4 in. (238 mm) x 2.6 in. (66 mm) x 1.9 in. (48 mm)

G1

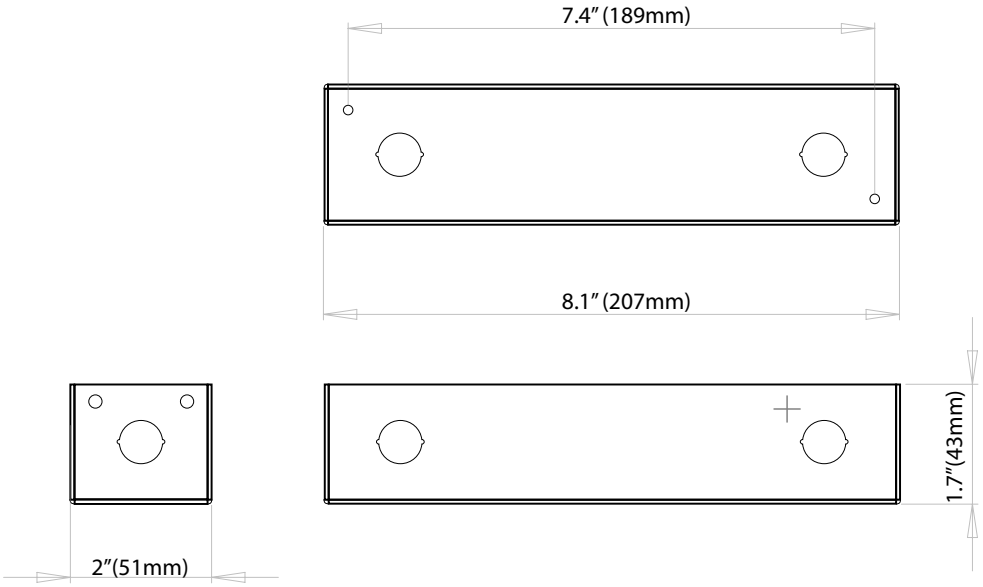

© LTF, L.L.C. All Rights Reserved.

G4

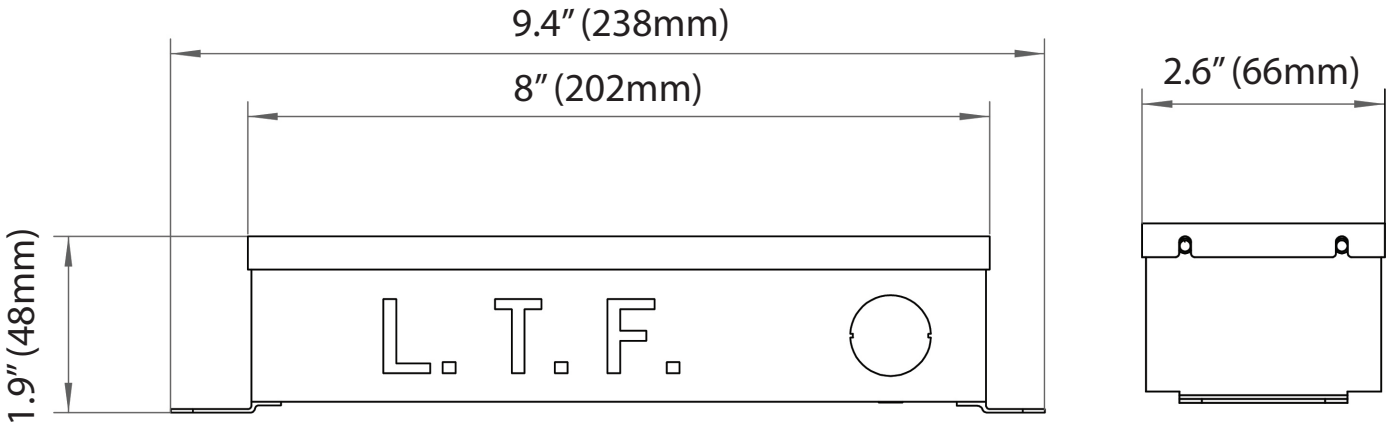

© LTF, L.L.C. All Rights Reserved.