150W 24V AC/DC
TA150WA24, TU150WA24 Series &
TA150WD2, TU150WD24 Series

LED & Halogen Bulbs!**

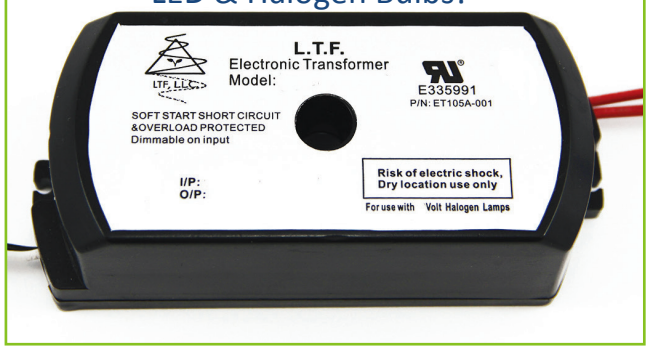

Efficiency	higher than 85%
Power Factor	>98%
Case TC*	90C° Max
Protection	Input/ Output
Storage	-30°C/ +90C°
Humidity	95% RH max
IP Rating	IP 60
Standard Dimming	ELV Dimmable
Special Dimming	0-10V Dimming (D10)

3 5* Year Warranty

FEATURES

- No load technology, works with both Halogen & LED AC loads **
- Isolated output power per NEC and UL safety requirements
- UL recognized/listed Class 2 power supply, meet UL 2108 requirements
- Auto-reset; Short circuit, Overload and Thermal protection
- Soft start
- Dimmable
- Low profile, small compact design to fit in most enclosures

ELECTRICAL SPECIFICATIONS

120V

Model #	Input Voltage	Input Current	Output Voltage	Weight	Load Type
TA150WA24	120V AC 50/60Hz	1.25 A	24V AC	240g	Incandescent & Halogen Bulbs
TA150WD24	120V AC 50/60Hz	1.25 A	24V DC	240g	Incandescent & Halogen Bulbs
TA150WA24LED	120V AC 50/60Hz	1.25 A	24V AC	240g	AC LED Bulbs, Incandescent & Halogen Bulbs
TA150WD24LED	120V AC 50/60Hz	1.25 A	24V DC	240g	LED Strips, LED Bulbs, Incandescent & Halogen Bulbs

120V Remote

Model #	Input Voltage	Input Current	Output Voltage	Weight	Load Type
TA150WA24RE	120V AC 50/60Hz	1.25 A	24V AC	713g	Incandescent & Halogen Bulbs
TA150WA24REO	120V AC 50/60Hz	1.25 A	24V AC	1037g	Incandescent & Halogen Bulbs
TA150WD24RE	120V AC 50/60Hz	1.25 A	24V DC	713g	Incandescent & Halogen Bulbs

* Under confirmed thermal condition

L.T.F, L.L.C. PHONE: (847) 498-5832 FAX: (773) 337-5628 EMAIL: sales@ltftechnology.com
Company's Address: 2905 MacArthur Blvd Northbrook, IL 60062 U.S.A. www.ltftechnology.com
© L.T.F., L.L.C. All rights reserved. L.T.F. reserves the right to change specification for product improvements without notification

120V Remote					
Model #	**Input Voltage**	**Input Current**	**Output Voltage**	**Weight**	**Load Type**
TA150WD24REO	120V AC 50/60Hz	1.25 A	24V DC	1037g	Incandescent & Halogen Bulbs
TA150WA24LEDRE	120V AC 50/60Hz	1.25 A	24V AC	713g	AC LED Bulbs, Incandescent & Halogen Bulbs
TA150WA24LEDREO	120V AC 50/60Hz	1.25 A	24V AC	1037g	AC LED Bulbs, Incandescent & Halogen Bulbs
TA150WD24LEDRE	120V AC 50/60Hz	1.25 A	24V DC	713g	LED Strips, LED Bulbs, Incandescent & Halogen Bulbs
TA150WD24LEDREO	120V AC 50/60Hz	1.25 A	24V DC	1037g	LED Strips, LED Bulbs, Incandescent & Halogen Bulbs

220-240V					
Model #	**Input Voltage**	**Input Current**	**Output Voltage**	**Weight**	**Load Type**
TU150WA24	220-240V AC 50/60Hz	0.68 A	24V AC	240g	Incandescent & Halogen Bulbs
TU150WD24	220-240V AC 50/60Hz	0.68 A	24V DC	240g	Incandescent & Halogen Bulbs
TU150WA24LED	220-240V AC 50/60Hz	0.68 A	24V AC	240g	AC LED Bulbs, Incandescent & Halogen Bulbs
TU150WD24LED	220-240V AC 50/60Hz	0.68 A	24V DC	250g	LED Strips, LED Bulbs, Incandescent & Halogen Bulbs

220-240V Remote					
Model #	**Input Voltage**	**Input Current**	**Output Voltage**	**Weight**	**Load Type**
TU150WA24RE	220-240V AC 50/60Hz	0.68 A	24V AC	713g	Incandescent & Halogen Bulbs
TU150WA24REO	220-240V AC 50/60Hz	0.68 A	24V AC	1037g	Incandescent & Halogen Bulbs
TU150WD24RE	220-240V AC 50/60Hz	0.68 A	24V DC	713g	Incandescent & Halogen Bulbs
TU150WD24REO	220-240V AC 50/60Hz	0.68 A	24V DC	1037g	Incandescent & Halogen Bulbs
TU150WA24LEDRE	220-240V AC 50/60Hz	0.68 A	24V AC	713g	AC LED Bulbs, Incandescent & Halogen Bulbs
TU150WA24LEDREO	220-240V AC 50/60Hz	0.68 A	24V AC	1037g	AC LED Bulbs, Incandescent & Halogen Bulbs
TU150WD24LEDRE	220-240V AC 50/60Hz	0.68 A	24V DC	723g	LED Strips, LED Bulbs, Incandescent & Halogen Bulbs
TU150WD24LEDREO	220-240V AC 50/60Hz	0.68 A	24V DC	1047g	LED Strips, LED Bulbs, Incandescent & Halogen Bulbs

L.T.F, L.L.C. PHONE: (847) 498-5832 FAX: (773) 337-5628 EMAIL: sales@ltftechnology.com
Company's Address: 2905 MacArthur Blvd Northbrook, IL 60062 U.S.A. www.ltftechnology.com
© L.T.F., L.L.C. All rights reserved. L.T.F. reserves the right to change specification for product improvements without notification

Mechanical Specs. for All AC Products

Available Form Factors	Dimensions
Standard “E5”	110X47X35mm
"E"	107X44.5x24.5mm
“G2”	233.1X85.5X48.9mm
“G3”	280x103x56mm

E5 - Standard

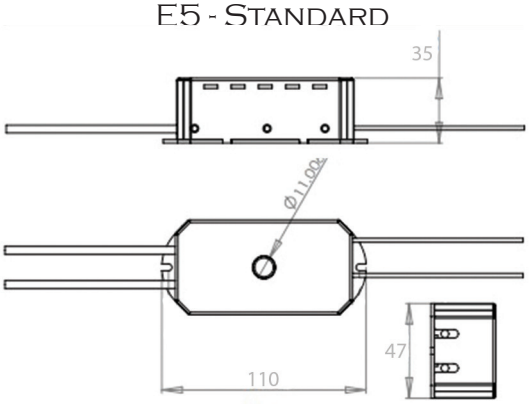

E - Special Order

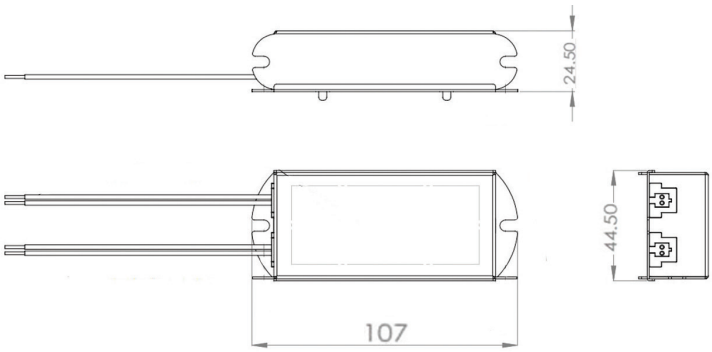

G2 - Remote(RE) Models Only

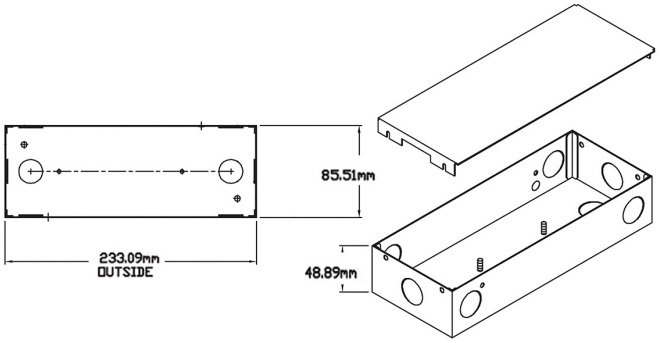

G3 - LED Remote (REO) Models Only

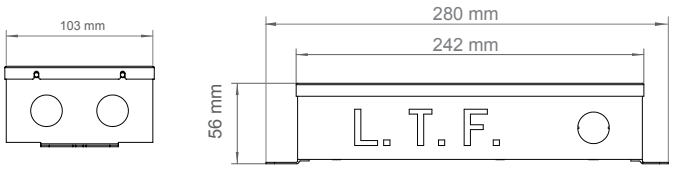

L.T.F, L.L.C. PHONE: (847) 498-5832 FAX: (773) 337-5628 EMAIL: sales@ltftechnology.com
Company’s Address: 2905 MacArthur Blvd Northbrook, IL 60062 U.S.A. www.ltftechnology.com
© L.T.F., L.L.C. All rights reserved. L.T.F. reserves the right to change specification for product improvements without notification

Mechanical Specs. for All DC Products

Available Form Factors	Dimensions
Standard “E6”	120X55.5X38mm
"E"	107X44.5x24.5mm
“G2”	233.1X85.5X48.9mm
“G3”	280x103x56mm

E6 - Standard

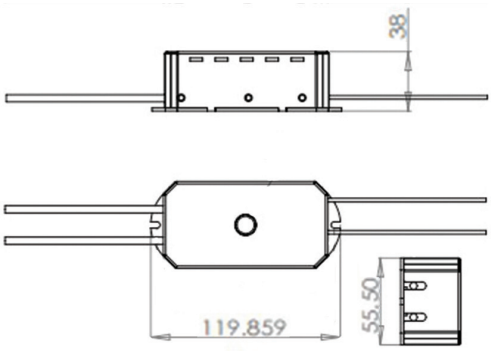

E - Special Order

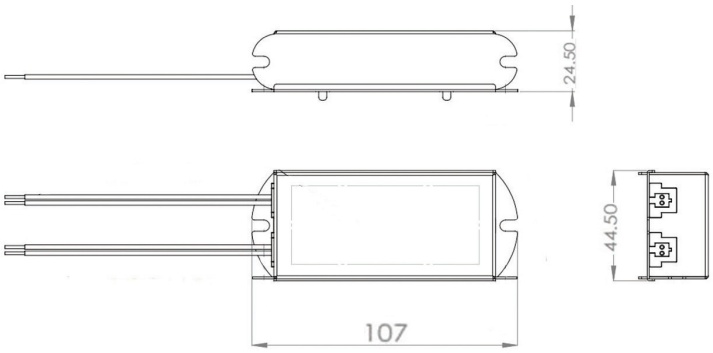

G2 - Remote(RE) Models Only

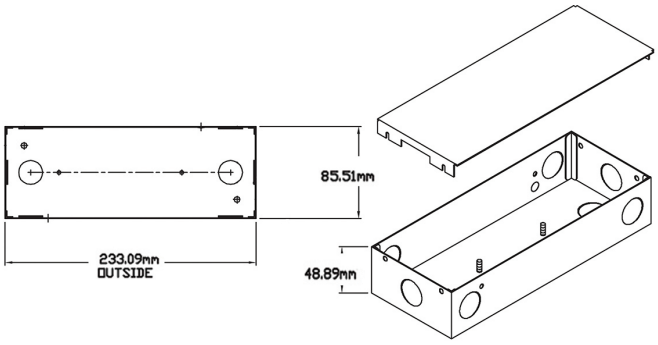

G3 - LED Remote (REO) Models Only

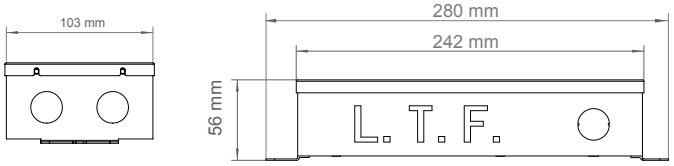

L.T.F, L.L.C. PHONE: (847) 498-5832 FAX: (773) 337-5628 EMAIL: sales@ltftechnology.com
Company’s Address: 2905 MacArthur Blvd Northbrook, IL 60062 U.S.A. www.ltftechnology.com
© L.T.F., L.L.C. All rights reserved. L.T.F. reserves the right to change specification for product improvements without notification